# PID controller

# TRM210

PID controller

Short guide

akYtec GmbH
Vahrenwalder Str. 269 A
30179 Hannover, Germany
Tel.: +49 (0) 511 16 59 672-0
www.akytec.de

## 1. Scope of delivery

| | |
|---|---|
| TRM210 | - 1 |
| Short guide | - 1 |
| Mounting kit | - 1 |
| Gasket | - 1 |

## 2. Ordering information

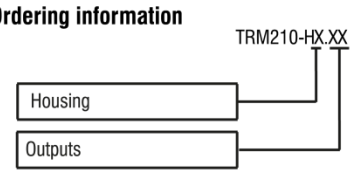


**Housing:**
- H1 – panel mount (96 x 96 x 70 mm)
- H2 – panel mount (96 x 48 x 100 mm)
- H3 – wall mount (105 x 130 x 65 mm)

**Outputs:**
- R – Relay
- T – NPN transistor
- C – TRIAC
- S – Solid state relay
- I – 4-20 mA
- U – 0-10 V

## 3. Wiring

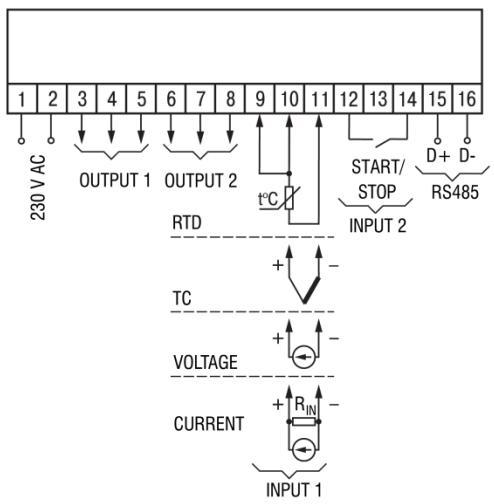


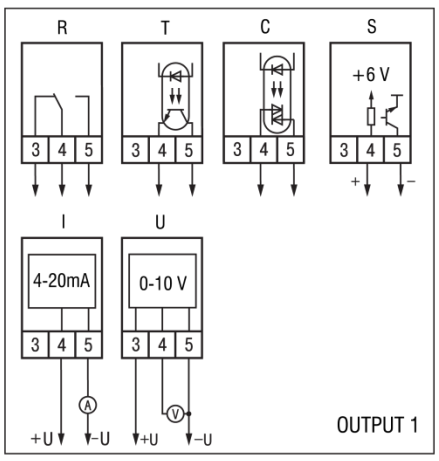


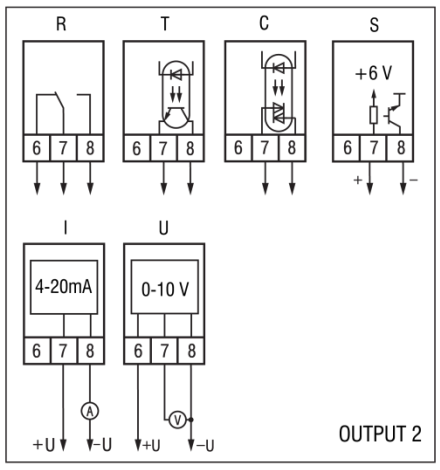


- Signal cables should be routed separately or screened from the supply cables.
- Only a shielded cable may be used for signal lines.
- Use wires of equal length and cross section when connecting RTD.
- Use a thermocouple cable when connecting TC.
- Themocouple sensing junctions of both channels must be isolated from each other and from the grounded equipment.
- Cold junction compensation (CJC) is provided.
- To measure a current signal a shunt resistor $R_{IN}$ = 100 ohm (±1%) should be connected in parallel.

## 4. Settings

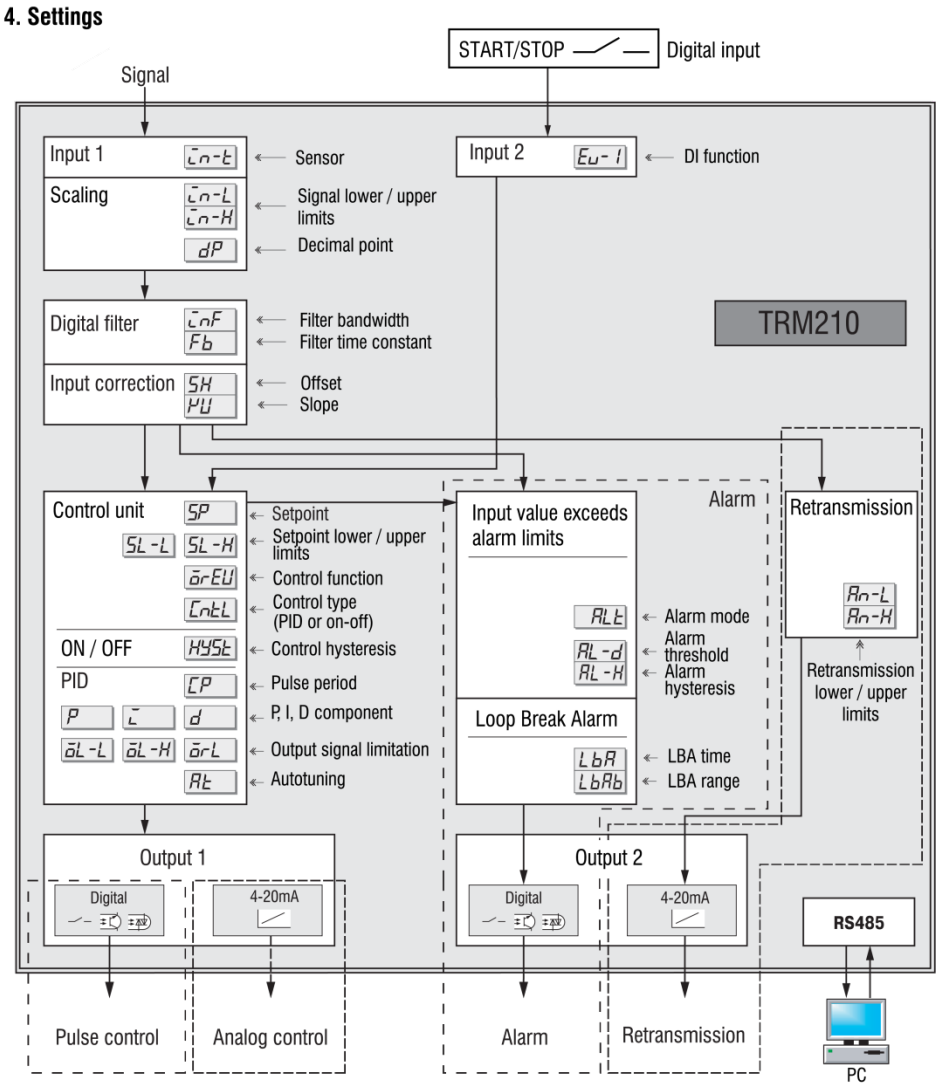


## 5. Dimensions

- To access the terminal block remove the front cover and disconnect the ribbon cable.
- Sealing rubber bushes should be trimmed to match the cable diameter.

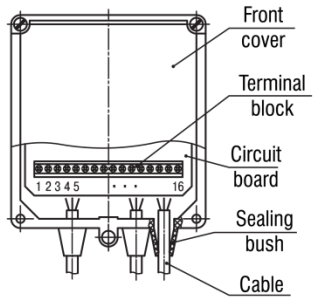


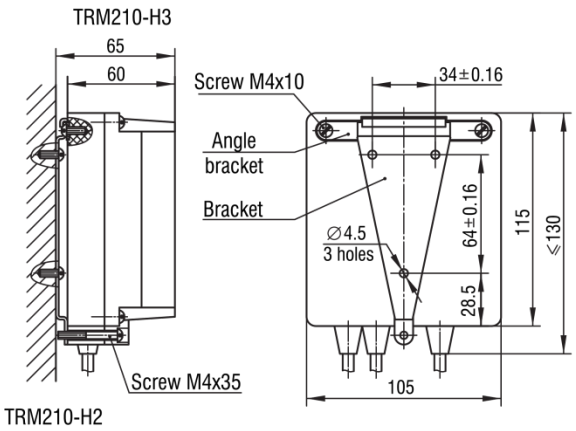


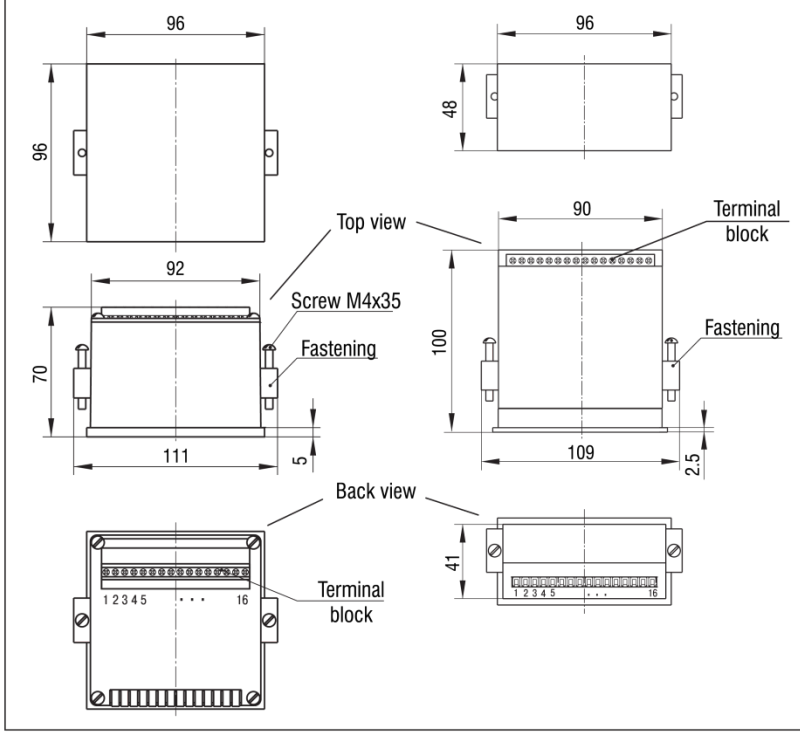


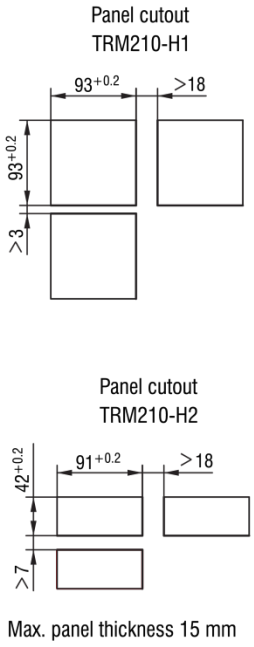


## 6. Safety

- Ensure that the device is provided with its own power supply line and electric fuse
- Ensure that the mains voltage matches the rated voltage specified on the nameplate
- Connect the power supply only after the wiring of inputs and outputs has been completed
- Do not use the device where it is subjected to flammable or explosive gases

## 7. Specifications

Table 1

| | | |
|---|---|---|
| Power supply | | 230 (90…245) V AC, (47…63 Hz) |
| Power consumption, max. | | 6 VA |
| **Inputs** | | |
| Analog inputs | | 1 |
| Sampling time, max. | | 1 s |
| Input resistance | 4-20 mA | external resistor $R_{IN}$ = 100 ohm (in parallel) |
| | 0-1 V | ≥ 100 kohm |
| Basic error | RTD | ±0.25% |
| | TC | ±0.5% |
| | Linear signals | ±0.5% |
| Digital input | | 1 |
| | ON resistance | < 1 kohm |
| | OFF resistance | > 100 kohm |
| **Outputs** | | |
| Optional output | | 2 |
| Digital | Relay | 1 A (PID control) / 8 A (alarm) 30 V DC / 230 V AC, cos φ ≥ 0.4 |
| | NPN transistor | 200 mA, 40 V DC |
| | TRIAC | 50 mA, 240 V AC (constant operation) 0.5A (f≤50 Hz, pulse duration ≤5 ms) |
| | Solid state relay | 100 mA, 4…6 V DC |
| Analog | 4-20 mA | 10…36 V, max. 1 kohm |
| | 0-10 V | 15…36 V, min 2 kohm |
| **Network** | | |
| RS485 interface | Terminals | D+, D- |
| | Protocols | Modbus RTU/ASCII, akYtec |
| | Baud rate | 2.4…115.2 kbit/s |
| | Cable | Shielded twisted pair (STP) |

| **Housing** | | | |
|---|---|---|---|
| Enclosure | H1 | H2 | H3 |
| Dimension, mm | 96 x 96 x 70 | 96 x 48 x 100 | 105 x 130 x 65 |
| IP Code | front IP54 | front IP54 | IP44 |

| **Environmental conditions** | |
|---|---|
| Ambient temperature | +1…+50°C |
| Storage temperature | -25…+55°C |
| Relative humidity | up to 80% (at +35°C, non-condensing) |
| Altitude | up to 2000 m above sea level |

## 8. Inputs (parametr in-t)

Table 2

| Display | Input signal | Measurement range |
|---|---|---|
| **Linear signals** | | |
| C0-5 | 0 - 5 mA | 0…100 % |
| C0.20 | 0 - 20 mA | 0…100 % |
| C4.20 | 4 - 20 mA | 0…100 % |
| U-50 | -50…+50 mV | 0…100 % |
| U0_1 | 0 - 1 V | 0…100 % |
| **RTD according to IEC 60751:2008** | | |
| r385 | Pt50 | -200…+750 °C |
| r.385 | Pt100 | -200…+750 °C |
| **RTD according to GOST 6651** | | |
| r391 | 50P | -200…+750 °C |
| r428 | 50M | -190…+200 °C |
| r426 | Cu50 | -50…+200 °C |
| r.391 | 100P | -200…+750 °C |
| r.428 | 100M | 190…+200 °C |
| r.426 | Cu100 | -50…+200 °C |
| r-23 | 53M | -50…+200 °C |
| r-46 | 46P | -200…+750 °C |
| **TC according to IEC 60584-1:2013** | | |
| E_J | J | -200…+1200 °C |
| E_n | N | -200…+1300 °C |
| E_K | K | -200…+1300 °C |
| E_S | S | 0…+1750 °C |
| E_r | R | 0…+1750 °C |
| E-A1 | A | 0…+2500 °C |
| E_t | T | -200…+400 °C |
| E_b | B | +200…+1800 °C |
| **TC according to GOST 8.585** | | |
| E_L | L | -200…+800 °C |
| E-A2 | A-2 | 0…+1800 °C |
| E-A3 | A-3 | 0…+1800 °C |

# PID controller

## 9. Configuration

Control elements (H2)

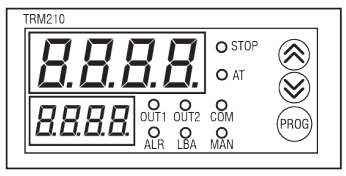


Upper display (red) shows
— Process value (Operation)
— Parameter name (Configuration)
— "MENU" (Menu)
— Error name (Error)

Lower display (green) shows
— Setpoint (Operation)
— Parameter value (Configuration)
— Parameter group (Menu)

LEDs:

„OUT1" - lights output 1 is ON
„OUT2" - lights output 2 is ON
„ALR" - blinks if the alarm is active
„LBA" - blinks when Loop Break Alarm is activated

„STOP" - lights when control is stopped by user
blinks when control is stopped due to a hardware error or LBA
„AT" - lights while Autotuning in progress
blinks when Autotuning failure
„COM" - flashes for 0.1 s on data transmission
„MAN" - lights when manual control is activated

Function keys

- Increase value or menu navigation
- Decrease value or menu navigation
- PROG - press > 3 s
  - enter the configuration mode
  - exit the parameter group
- PROG - press < 1 s
  - enter the parameter group
  - save the parameter and go the next one

Key combinations

- PROG + ⌃ + ⌄ - passcode access
- PROG + ⌃ - Modify the decimal part of parameter (Configuration)
- PROG + ⌄ - Go back to modify the integer part of parameter (Configuration)

Autotuning

To start the Auotuning set **r-S**=rUn and **At**=rUn
The approximate values of coefficients **P**, **i**, **d** and the parameters **inF**, **CP**, **rAmP** will be calculated. After the autotuning is successfullycompleted, the parameter **At** is set to StoP. The LED „AT" lights during the Autotuning. After the parameter **rAmP**, **P**, **i** or **d** is changed, the autotuning should be carried out.

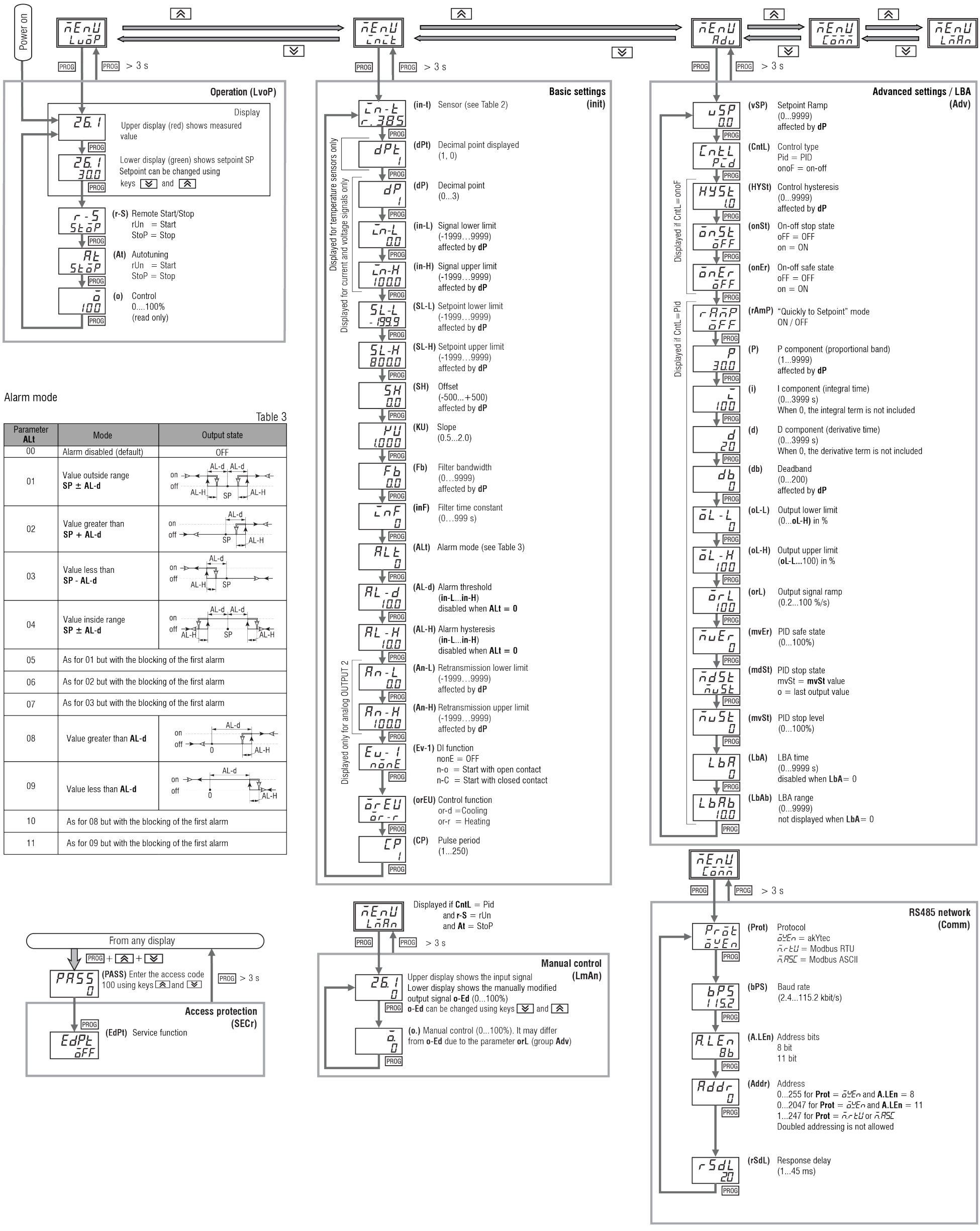


### Alarm mode

Table 3

| Parameter **ALt** | Mode | Output state |
|---|---|---|
| 00 | Alarm disabled (default) | OFF |
| 01 | Value outside range **SP ± AL-d** | on / off, AL-d, AL-H, SP |
| 02 | Value greater than **SP + AL-d** | on / off, AL-d, SP, AL-H |
| 03 | Value less than **SP - AL-d** | on / off, AL-d, AL-H, SP |
| 04 | Value inside range **SP ± AL-d** | on / off, AL-d, AL-H, SP |
| 05 | As for 01 but with the blocking of the first alarm | |
| 06 | As for 02 but with the blocking of the first alarm | |
| 07 | As for 03 but with the blocking of the first alarm | |
| 08 | Value greater than **AL-d** | on / off, AL-d, 0, AL-H |
| 09 | Value less than **AL-d** | on / off, AL-d, 0, AL-H |
| 10 | As for 08 but with the blocking of the first alarm | |
| 11 | As for 09 but with the blocking of the first alarm | |



akYtec GmbH · Vahrenwalder Str. 269 A · 30179 Hannover · Germany
Tel: +49 (0) 511 16 59 6720 · www.akytec.de